ISO FULL BLEED A3 420 X 297 MM

PRINTED ON ___% POST-CONSUMER RECYCLED CONTENT PAPER

# MANCHESTER BOLLARD

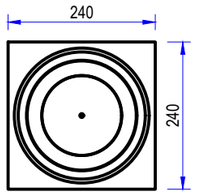


Plan
Scale 1:10

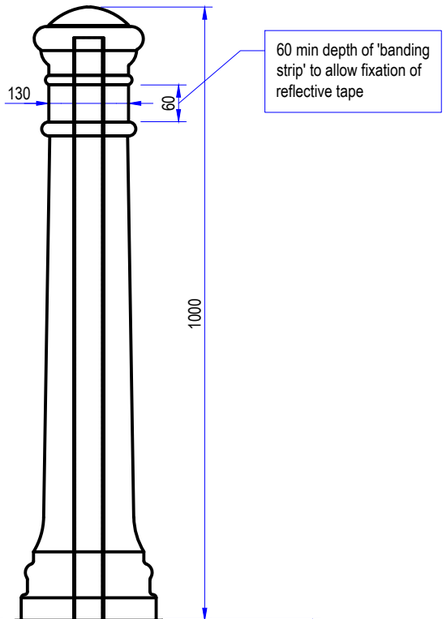


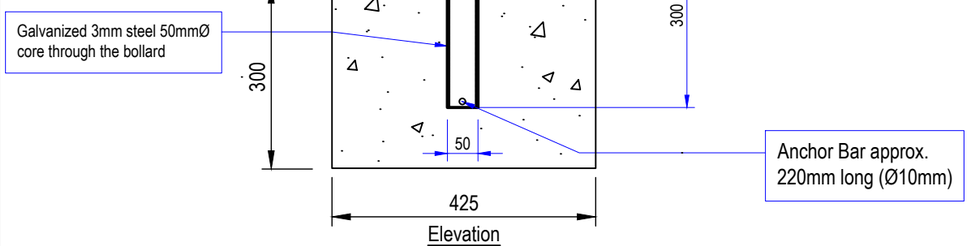


Elevation
Scale 1:10

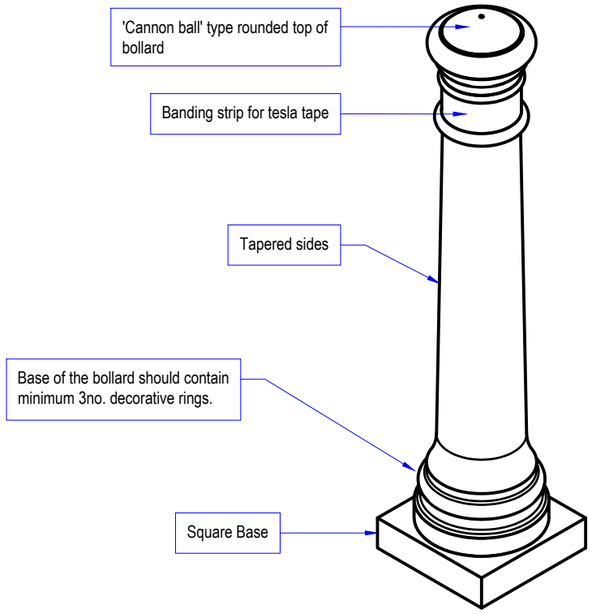


Option A - Without sign fixing
Scale 1:10

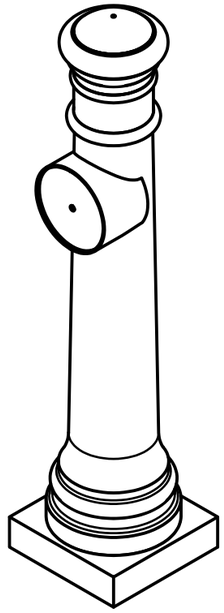

Option B - With sign fixing
Scale 1:10

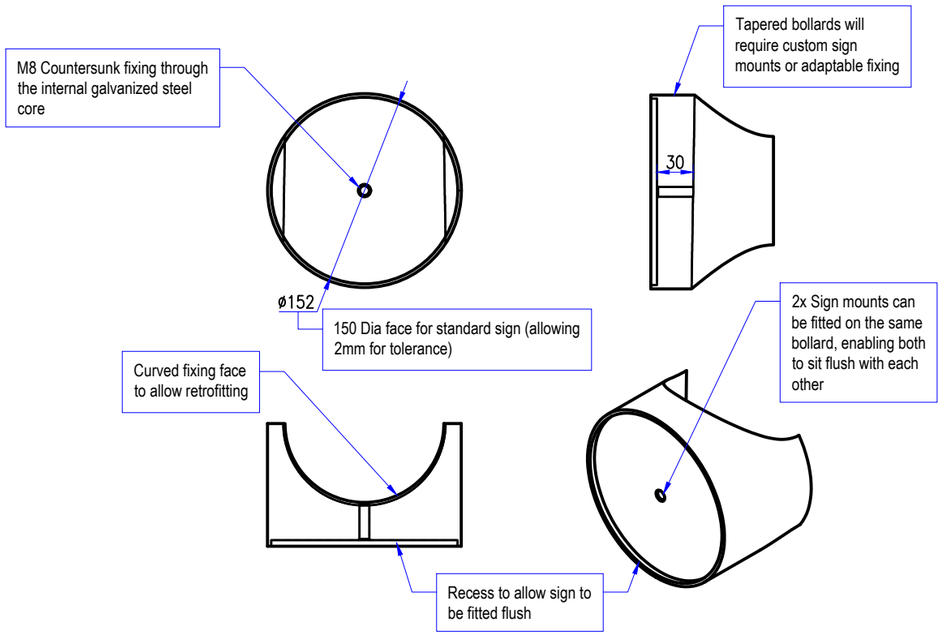


Detail of sign fixings
Scale 1:5

## NOTES

1. All dimensions are in millimetres unless otherwise stated.
2. Do not scale from this drawing. Use only written dimensions.
3. All references to Clauses are to Southwark Highway Specification Clauses unless otherwise stated.
4. Recycled structural steel hollow section (circular) tube from EN 10210-S27 steel as BS EN 10210-1:2006 and BS EN 10210-2:2006. Hot dipped galvanised for corrosion protection to BS EN ISO 1461:1999.
5. Recycled structural steel solid rod (round) to BS EN ISO 10025-S275. Hot dipped galvanised for corrosion protection to BS EN ISO 1461:1999.
6. Engineering grade polyurethane (durracast/ferrocast or approved similar) with pigment to RAL 9005 jet black. Finished with primecoat and two pack polyurethane paint in RAL 9005 jet black.
7. Foundations to be 425x425x300mm minimum
8. Visibility bands to be yellow, non-flurescent, retroreflectorised, microprismatic material as BS 8408:2005.

| REV | DATE | REVISION DESCRIPTION / DETAILS | DRN BY | CHKD BY | APRVD BY |
|---|---|---|---|---|---|

Southwark Council
southwark.gov.uk
160 TOOLEY STREET LONDON SE1P 5LX

PROJECT:
SOUTHWARK STREETSCAPE DESIGN MANUAL - STANDARD DETAILS

TITLE:
"MANCHESTER" TYPE BOLLARD

| | | | |
|---|---|---|---|
| STATUS: DRAFT | | DRAWN | OM |
| | | DESIGNED | OM |
| SCALE: 1 : 10 @A3 | | CHECKED | DR |
| | | APPROVED | DR |
| DRAWING NO: LBS/400/01 | | REV: - | |
| DATE DRAWN: AUGUST 2017 | DATE ISSUED: 18 Feb 2019 | | |

S:\HIGHWAYS MAINTENANCE\SSDM\02-SSDM_CONTENT_ARCHIVE\REVISION OF SSDM\TECH DRWGS\TD DETAILS\SERIES 400 SAFETY FENCES, BARRIERS AND PEDESTRIAN GUARDRAIL\DWG\LBS-400-01 MANCHESTER BOLLARD.DWG